MU-2B B, D (-10), F (-20), G (-30)

TAKE-OFF ENGINE FAILURE - UNABLE TO CLIMB
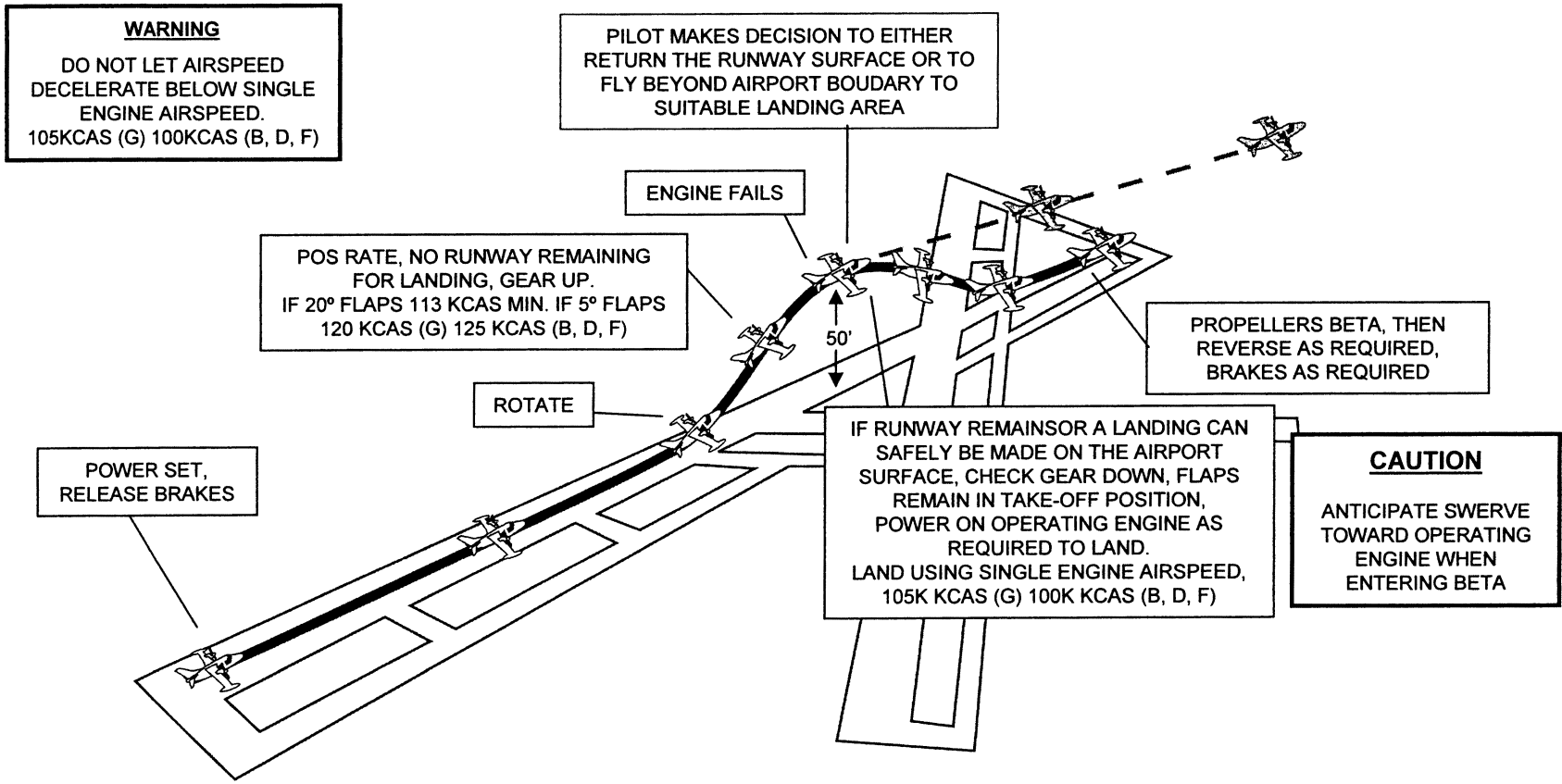
CLASSROOM DISCUSSION OR FTD USE ONLY